1. CENTER STRUCTURE

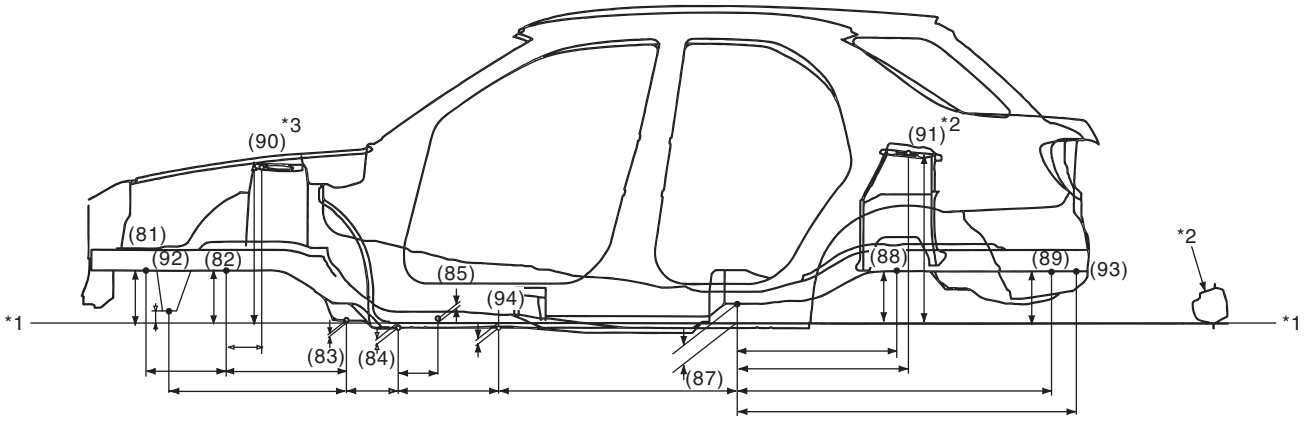

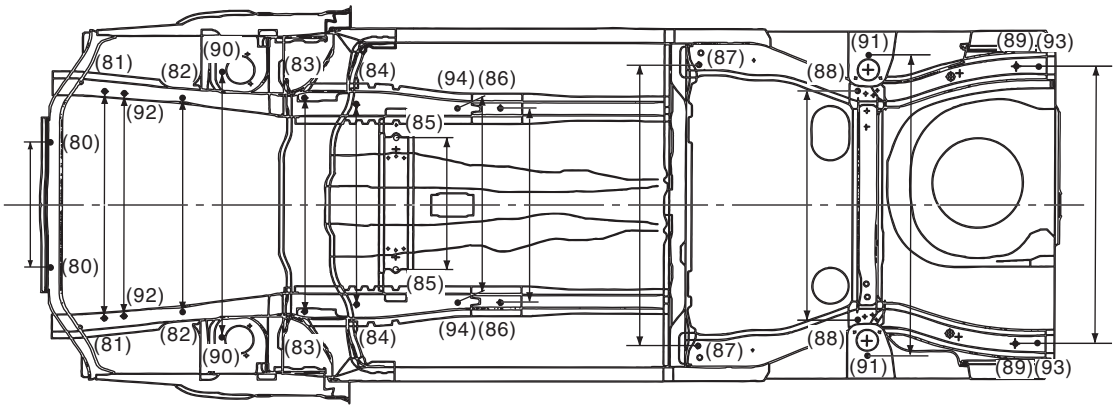

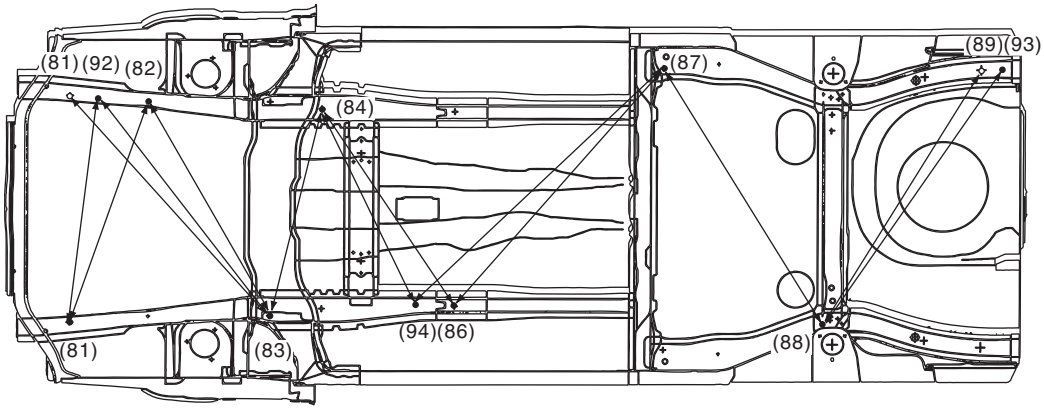

BS-00633

*1: Standard line
*2: Side sill
*3: Upper face

Datum Dimensions

Point of measurement	Dimension mm (in)
Datum line to (81)	206 (8.11)
Datum line to (92)	77 (3.03)
Datum line to (82)	206 (8.11)
Datum line to (90)	620 (24.41)
Datum line to (83)	8 (0.31)
Datum line to (84)	20 (0.79)
Datum line to (85)	13 (0.51)
Datum line to (94)	12 (0.47)
Datum line to (87)	76 (2.99)
Datum line to (88)	206 (8.11)
Datum line to (91)	674 (26.54)
Datum line to (89)	205 (8.07)
(81) to (82)	317 (12.48)
(82) to (90)	157 (6.18)
(82) to (83)	485 (19.09)
(92) to (83)	694 (27.32)
(83) to (84)	206 (8.11)
(84) to (85)	159 (6.26)
(84) to (94)	380 (14.96)
(94) to (87)	982 (38.66)
(87) to (88)	633 (24.92)
(87) to (91)	673 (26.50)
(87) to (89)	1,258 (49.53)
(87) to (93)	1,358 (53.46)
(80) RH to (80) LH	500 (19.69)
(81) RH to (81) LH	910 (35.83)
(92) RH to (92) LH	906 (35.67)
(82) RH to (82) LH	860 (33.86)
(90) RH to (90) LH	1,065 (41.93)
(83) RH to (83) LH	856 (33.70)
(84) RH to (84) LH	800 (31.50)
(85) RH to (85) LH	529 (20.83)
(94) RH to (94) LH	776 (30.55)
(86) RH to (86) LH	780 (30.71)
(87) RH to (87) LH	1,128 (44.41)
(88) RH to (88) LH	920 (36.22)
(91) RH to (91) LH	1,205 (47.44)
(89) RH to (89) LH	1,110 (43.70)
(93) RH to (93) LH	1,110 (43.70)
(81) LH to (92) RH	924 (36.38)
(81) LH to (82) RH	940 (37.01)
(81) RH to (83) LH	1,209 (47.60)
(92) RH to (83) LH	1,124 (44.25)
(82) RH to (83) LH	1,005 (39.57)
(83) LH to (84) RH	854 (33.62)
(84) RH to (94) LH	875 (34.45)
(84) RH to (86) LH	951 (37.44)
(94) LH to (87) RH	1,371 (53.98)
(86) LH to (87) RH	1,269 (49.96)
(87) RH to (88) LH	1,211 (47.68)

Point of measurement	Dimension mm (in)
(88) LH to (89) RH	1,192 (46.93)
(88) LH to (93) RH	1,247 (49.09)

2. WAGON MODEL/SEDAN MODEL (FRONT STRUCTURE)

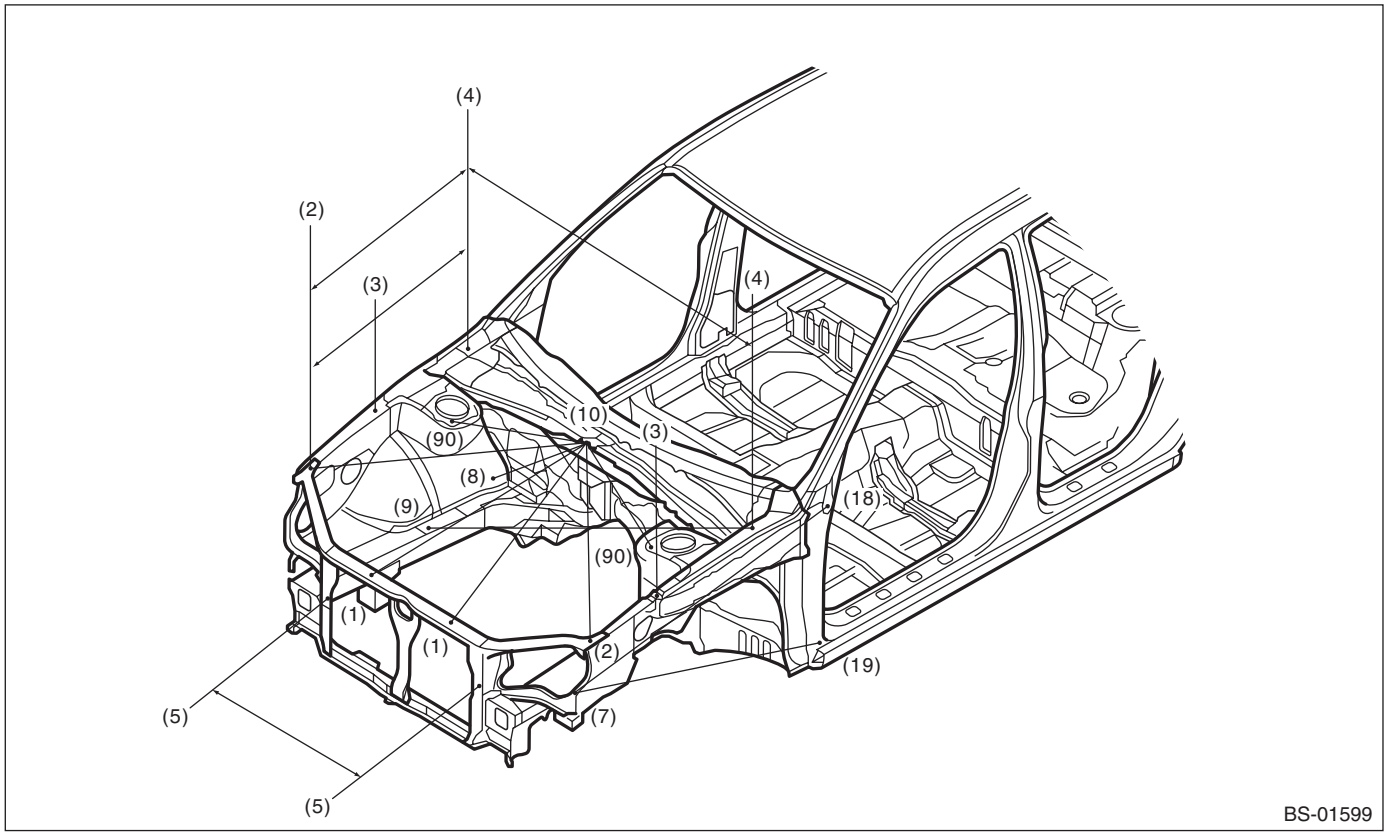

Point of measurement	Dimension mm (in)
(10) to (1) RH	912 (35.91)
(10) to (1) LH	912 (35.91)
(10) to (90) RH	566 (22.28)
(10) to (90) LH	566 (22.28)
(10) to (8) RH	581 (22.87)
(10) to (8) LH	581 (22.87)
(10) to (2) RH	944 (37.16)
(10) to (2) LH	944 (37.16)
(4) RH to (2) RH	774 (30.47)
(4) LH to (2) LH	774 (30.47)
(4) RH to (3) RH	430 (16.93)
(4) LH to (3) LH	430 (16.93)
(90) RH to (90) LH	1,065 (41.93)
(8) RH to (8) LH	894 (35.20)
(8) RH to (4) LH	1,210 (47.64)
(8) LH to (4) RH	1,210 (47.64)
(3) RH to (2) RH	346 (13.61)
(3) LH to (2) LH	346 (13.61)
(4) RH to (4) LH	1,417 (55.79)
(2) RH to (2) LH	1,340 (52.76)
(5) RH to (5) LH	720 (28.35)
(7) RH to (18) RH	1,059 (41.70)
(7) LH to (18) LH	1,059 (41.70)
(7) RH to (19) RH	1,053 (41.44)
(7) LH to (19) LH	1,053 (41.44)

Point of measurement	Dimension mm (in)
(4) RH to (2) LH	1,580 (62.22)
(4) LH to (2) RH	1,580 (62.22)
(3) RH to (3) LH	1,396 (54.96)
(3) RH to (4) LH	1,470 (57.87)
(3) LH to (4) RH	1,470 (57.87)
(2) RH to (3) LH	1,411 (55.54)
(2) LH to (3) RH	1,411 (55.54)
(9) RH to (9) LH	860 (33.86)
(9) RH to (8) LH	931 (36.65)
(9) LH to (8) RH	931 (36.65)
(9) RH to (4) LH	1,278 (50.31)
(9) LH to (4) RH	1,278 (50.31)

Datum Dimensions

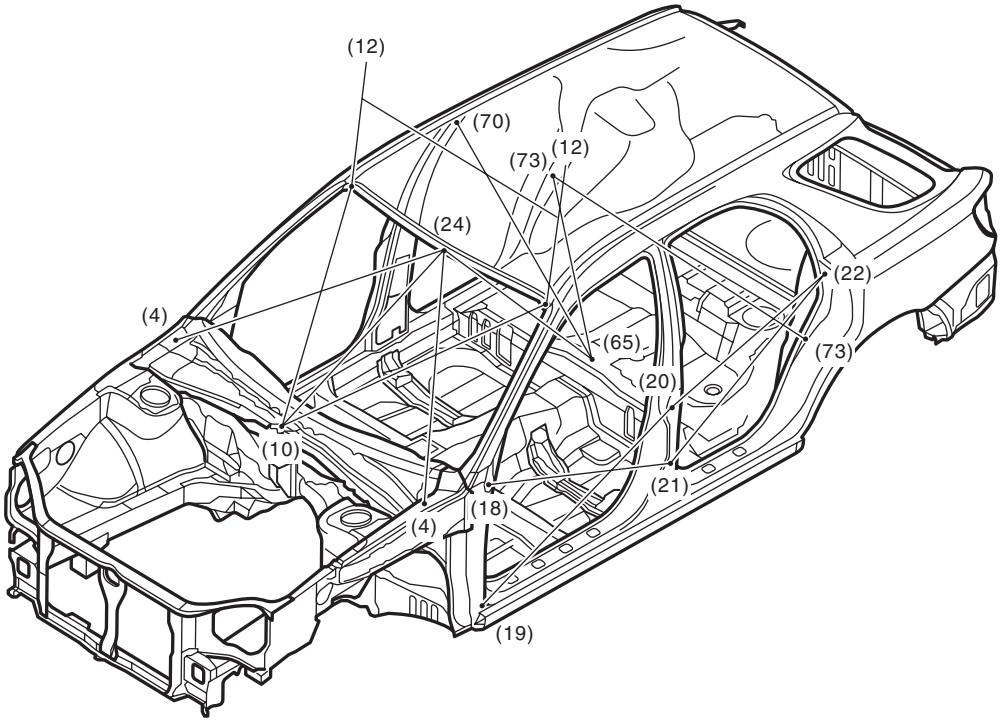

BS-00550

Point of measurement	Dimension mm (in)
(4) RH to (24)	1,127 (44.37) Wagon model
(4) LH to (24)	1,110 (43.70) Sedan model
(10) to (24)	958 (37.72) Wagon model
(10) to (24)	935 (36.81) Sedan model
(10) to (12) RH	1,122 (44.17) Wagon model
(10) to (12) RH	1,106 (43.54) Sedan model
(10) to (12) LH	1,122 (44.17) Wagon model
(10) to (12) LH	1,106 (43.17) Sedan model
(12) RH to (12) LH	1,029 (40.51) Wagon model
(12) RH to (12) LH	1,042 (41.02) Sedan model
(18) RH to (21) RH	1,049 (41.30)
(18) LH to (21) LH	1,049 (41.30)
(19) RH to (20) RH	1,089 (42.87)
(19) LH to (20) LH	1,089 (42.87)
(20) RH to (22) RH	869 (34.21)
(20) LH to (22) LH	869 (34.21)
(21) RH to (22) RH	985 (38.78)
(21) LH to (22) LH	985 (38.78)
(24) to (65)	1,232 (48.50) Wagon model
(24) to (65)	1,237 (48.70) Sedan model
(65) to (70) RH	1,067 (42.01)
(65) to (70) LH	1,067 (42.01)
(65) to (73) RH	830 (32.68)
(65) to (73) LH	830 (32.68)
(73) RH to (73) LH	1,394 (54.88)

3. WAGON MODEL/SEDAN MODEL (REAR STRUCTURE)

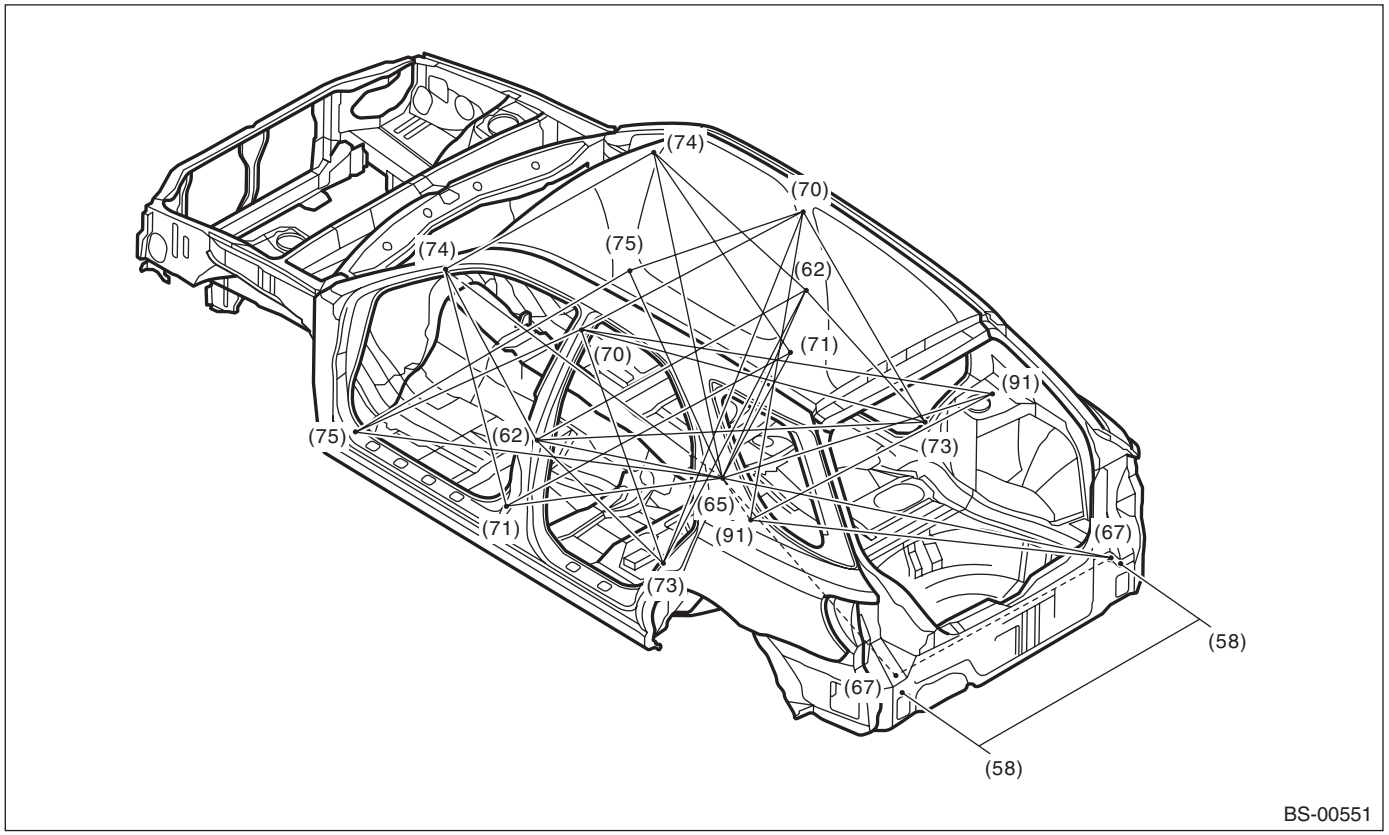

Point of measurement	Dimension mm (in)
(58) RH to (58) LH	1,128 (44.41)
(62) RH to (62) LH	1,332 (52.44)
(62) RH to (65)	915 (36.02)
(62) LH to (65)	915 (36.02)
(62) RH to (73) RH	762 (30.00)
(62) LH to (73) LH	762 (30.00)
(62) RH to (73) LH	1,561 (61.46)
(62) LH to (73) RH	1,561 (61.46)
(62) RH to (74) RH	592 (23.31) Wagon model
(62) LH to (74) LH	603 (23.74) Sedan model
(65) to (67) RH	1,501 (59.09)
(65) to (67) LH	1,501 (59.09)
(65) to (71) RH	823 (32.40)
(65) to (71) LH	823 (32.40)
(65) to (74) RH	1,275 (50.20) Wagon model
(65) to (74) LH	1,282 (50.47) Sedan model
(65) to (75) RH	1,450 (57.09)
(65) to (75) LH	1,450 (57.09)
(65) to (91) RH	1,064 (41.89)
(65) to (91) LH	1,064 (41.89)
(67) RH to (67) LH	1,110 (43.70)
(67) RH to (91) LH	1,381 (54.37)
(67) LH to (91) RH	1,381 (54.37)
(70) RH to (70) LH	1,060 (41.73)
(70) RH to (73) RH	948 (37.32)

Point of measurement	Dimension mm (in)
(70) LH to (73) LH	948 (37.32)
(70) RH to (73) LH	1,542 (60.71)
(70) LH to (73) RH	1,542 (60.71)
(70) RH to (75) RH	1,443 (56.81)
(70) LH to (75) LH	1,443 (56.81)
(70) RH to (91) LH	1,532 (60.32)
(70) LH to (91) RH	1,532 (60.32)
(71) RH to (71) LH	1,361 (53.58)
(71) RH to (74) RH	954 (37.56) Wagon model
(71) LH to (74) LH	949 (37.36) Sedan model
(74) RH to (74) LH	1,135 (44.69) Wagon model
(74) RH to (74) LH	1,147 (45.16) Sedan model
(75) RH to (75) LH	1,399 (55.08)
(91) RH to (91) LH	1,205 (47.44)

4. WAGON MODEL (FRONT STRUCTURE)

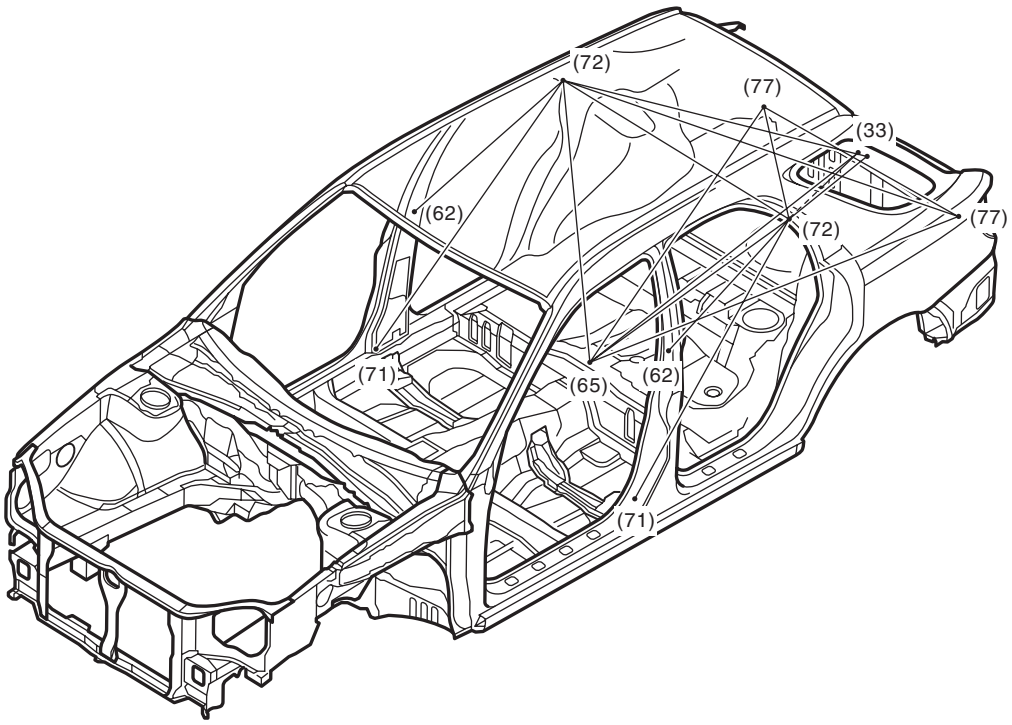

BS-00552

Point of measurement	Dimension mm (in)
(33) RH to (65)	1,534 (60.39)
(33) LH to (65)	1,534 (60.39)
(33) RH to (72) LH	1,334 (52.52)
(33) LH to (72) RH	1,334 (52.52)
(62) RH to (72) RH	732 (28.82)
(62) LH to (72) LH	732 (28.82)
(65) to (72) RH	1,076 (42.36)
(65) to (72) LH	1,076 (42.36)
(65) to (77) RH	1,538 (60.55)
(65) to (77) LH	1,538 (60.55)
(71) RH to (72) RH	1,223 (48.15)
(71) LH to (72) LH	1,223 (48.15)
(72) RH to (72) LH	1,226 (48.27)
(72) RH to (77) LH	1,544 (60.79)
(72) LH to (77) RH	1,544 (60.79)
(77) RH to (77) LH	898 (35.35)

5. WAGON MODEL (REAR STRUCTURE)

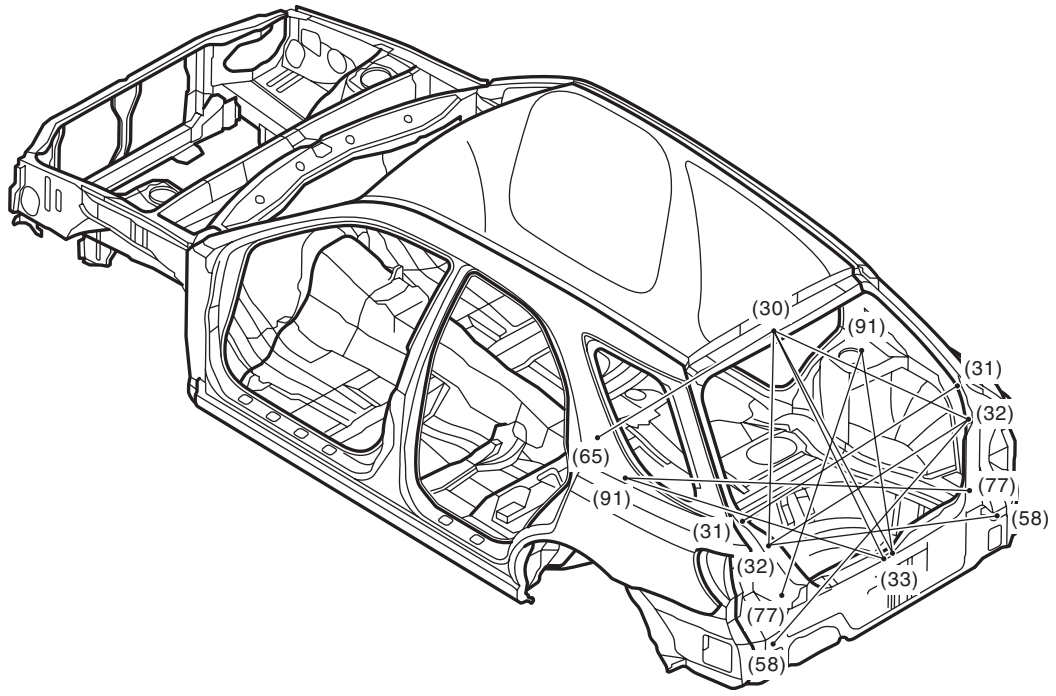

BS-00553

Point of measurement	Dimension mm (in)
(30) to (32) RH	850 (33.46)
(30) to (32) LH	850 (33.46)
(30) to (33) RH	904 (35.59)
(30) to (33) LH	904 (35.59)
(30) to (65)	1,293 (50.91)
(31) RH to (31) LH	1,212 (47.72)
(32) RH to (32) LH	1,038 (40.87)
(32) RH to (58) LH	1,139 (44.84)
(32) LH to (58) RH	1,139 (44.84)
(33) RH to (91) RH	993 (39.09)
(33) LH to (91) LH	993 (39.09)
(77) RH to (91) LH	1,289 (50.75)
(77) LH to (91) RH	1,289 (50.75)

6. SEDAN MODEL (FRONT STRUCTURE)

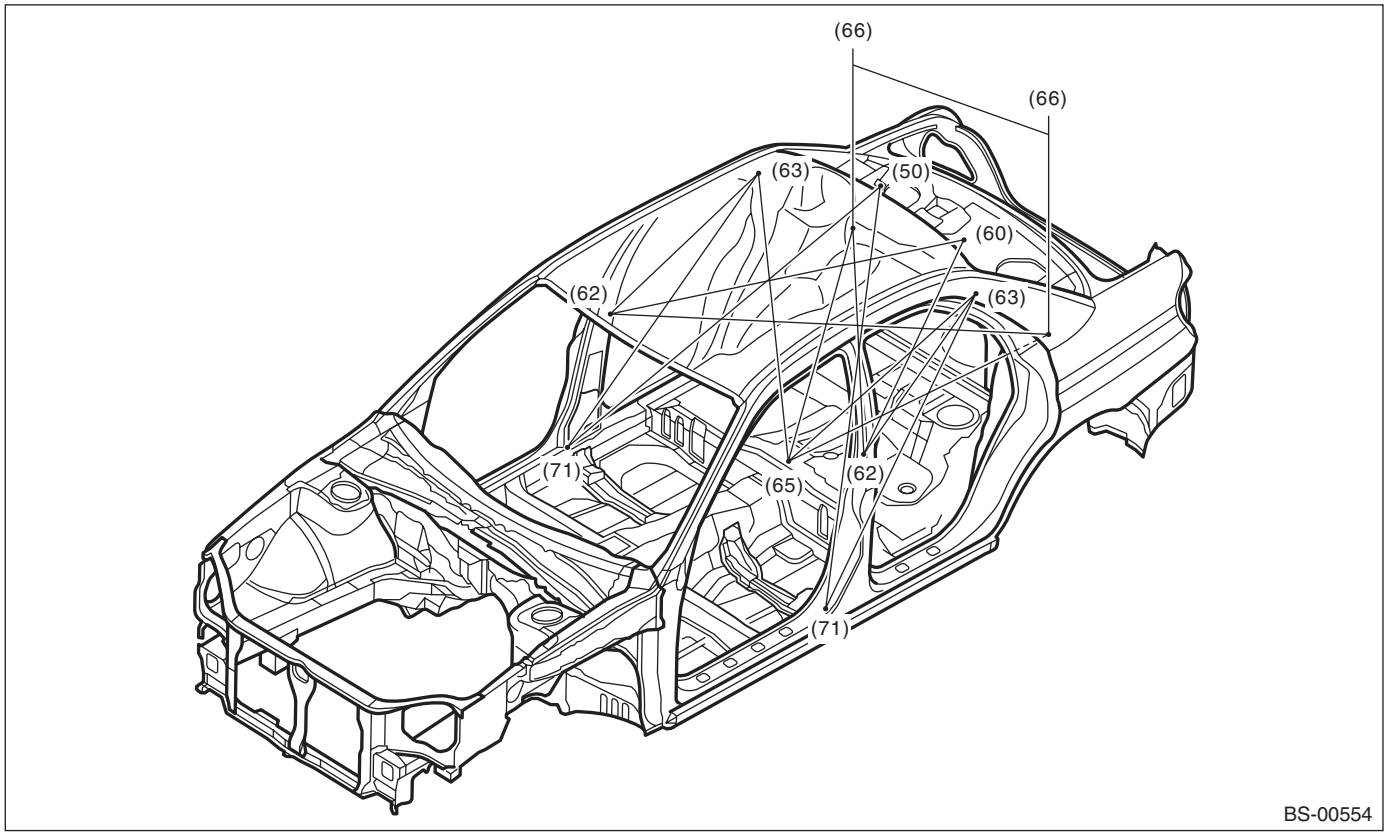

Point of measurement	Dimension mm (in)
(50) to (71) RH	1,562 (61.50)
(50) to (71) LH	1,562 (61.50)
(60) to (62) RH	1,338 (52.68)
(60) to (62) LH	1,338 (52.68)
(62) RH to (63) RH	773 (30.43)
(62) LH to (63) LH	773 (30.43)
(62) RH to (66) LH	1,449 (57.05)
(62) LH to (66) RH	1,449 (57.05)
(63) RH to (65)	1,118 (44.02)
(63) LH to (65)	1,118 (44.02)
(63) RH to (71) RH	1,283 (50.51)
(63) LH to (71) LH	1,283 (50.51)
(65) to (66) RH	956 (37.64)
(65) to (66) LH	956 (37.64)
(66) RH to (66) LH	840 (33.07)

7. SEDAN MODEL (REAR STRUCTURE)

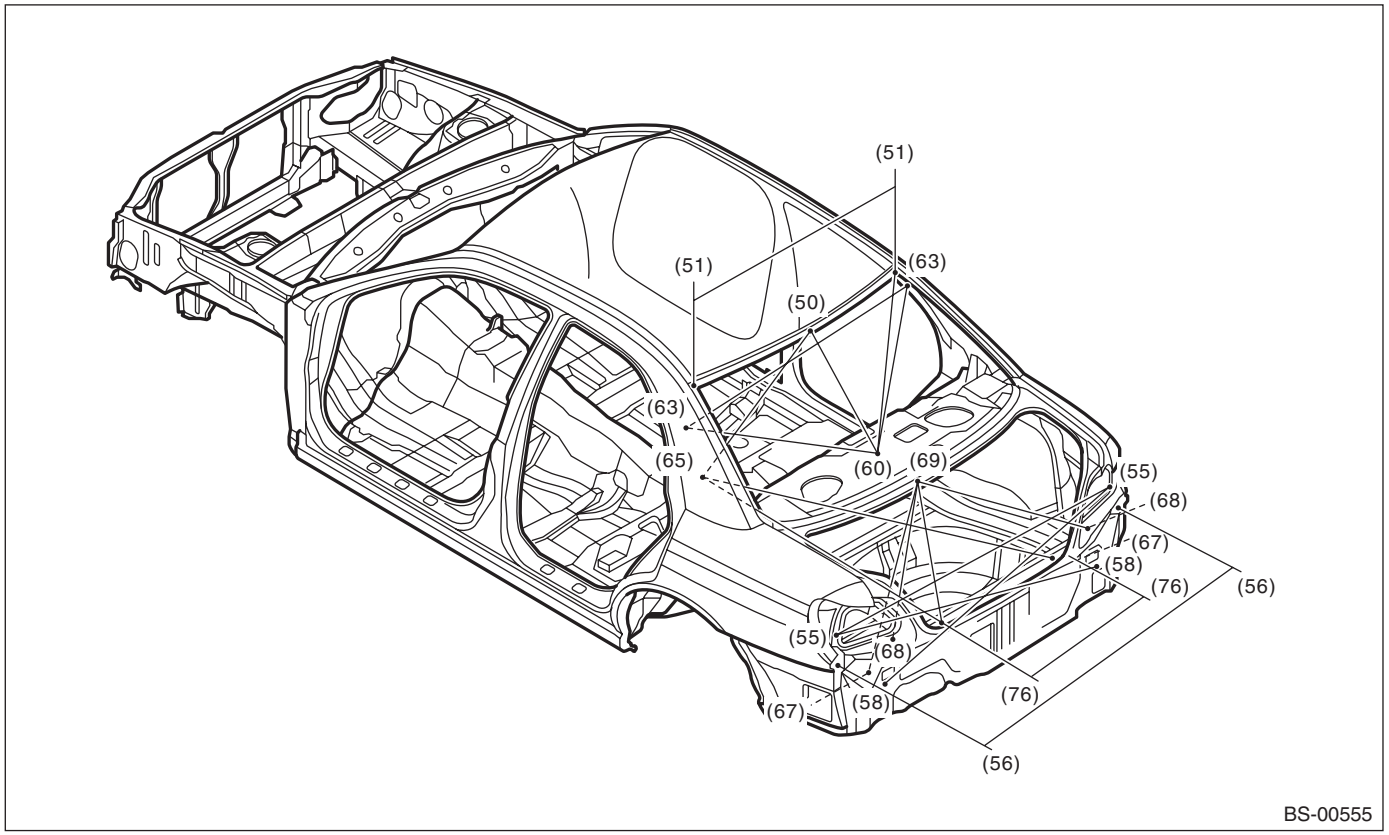

Point of measurement	Dimension mm (in)
(50) to (60)	501 (19.72)
(50) to (65)	1,082 (42.60)
(51) RH to (51) LH	1,025 (40.35)
(51) RH to (60)	734 (28.90)
(55) RH to (55) LH	1,406 (55.35)
(55) RH to (58) LH	1,297 (51.06)
(55) LH to (58) RH	1,297 (51.06)
(56) RH to (56) LH	1,426 (56.14)
(60) to (63) RH	764 (30.08)
(60) to (63) LH	764 (30.08)
(63) RH to (63) LH	1,183 (46.57)
(65) to (76) RH	1,544 (60.79)
(65) to (76) LH	1,544 (60.79)
(65) to (68) RH	1,581 (62.24)
(65) to (68) LH	1,581 (62.24)
(67) RH to (69)	784 (30.87)
(67) LH to (69)	784 (30.87)
(68) RH to (68) LH	1,020 (40.16)
(68) RH to (69)	681 (26.81)
(68) LH to (69)	681 (26.81)
(69) to (76) RH	537 (21.14)
(69) to (76) LH	537 (21.14)
(76) RH to (76) LH	600 (23.62)

8. SUB FRAME ALIGNMENT

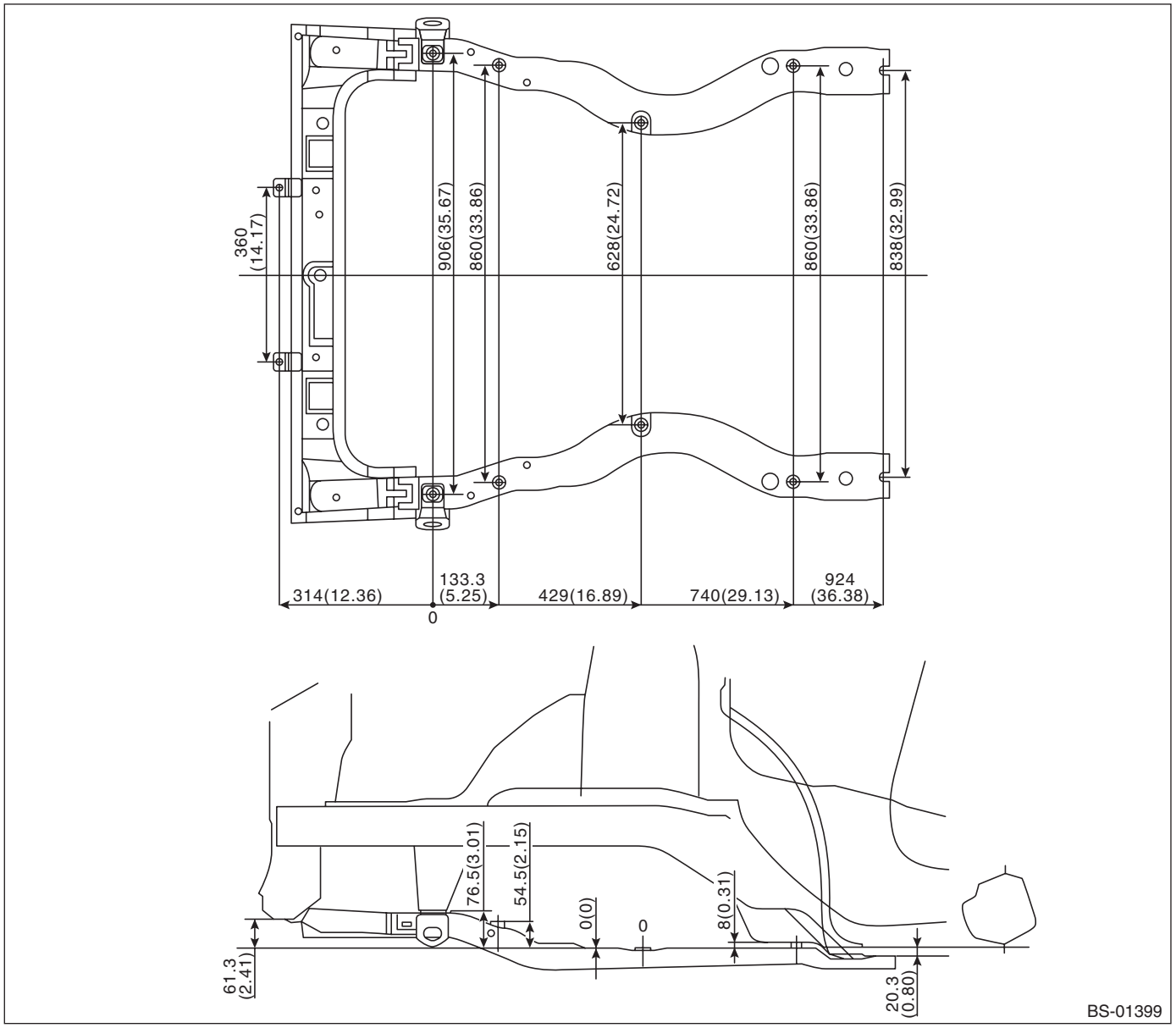

Unit: mm (in)

Horizontal and vertical dimensions are values measured from datum points (0).

INSTRUMENTATION/DRIVER INFO

IDI

		Page
1.	General Description	2
2.	Combination Meter System	3
3.	Combination Meter	11
4.	Speedometer	15
5.	Tachometer	16
6.	Fuel Gauge	17
7.	Engine Coolant Temperature Gauge	18
8.	Ambient Sensor	19